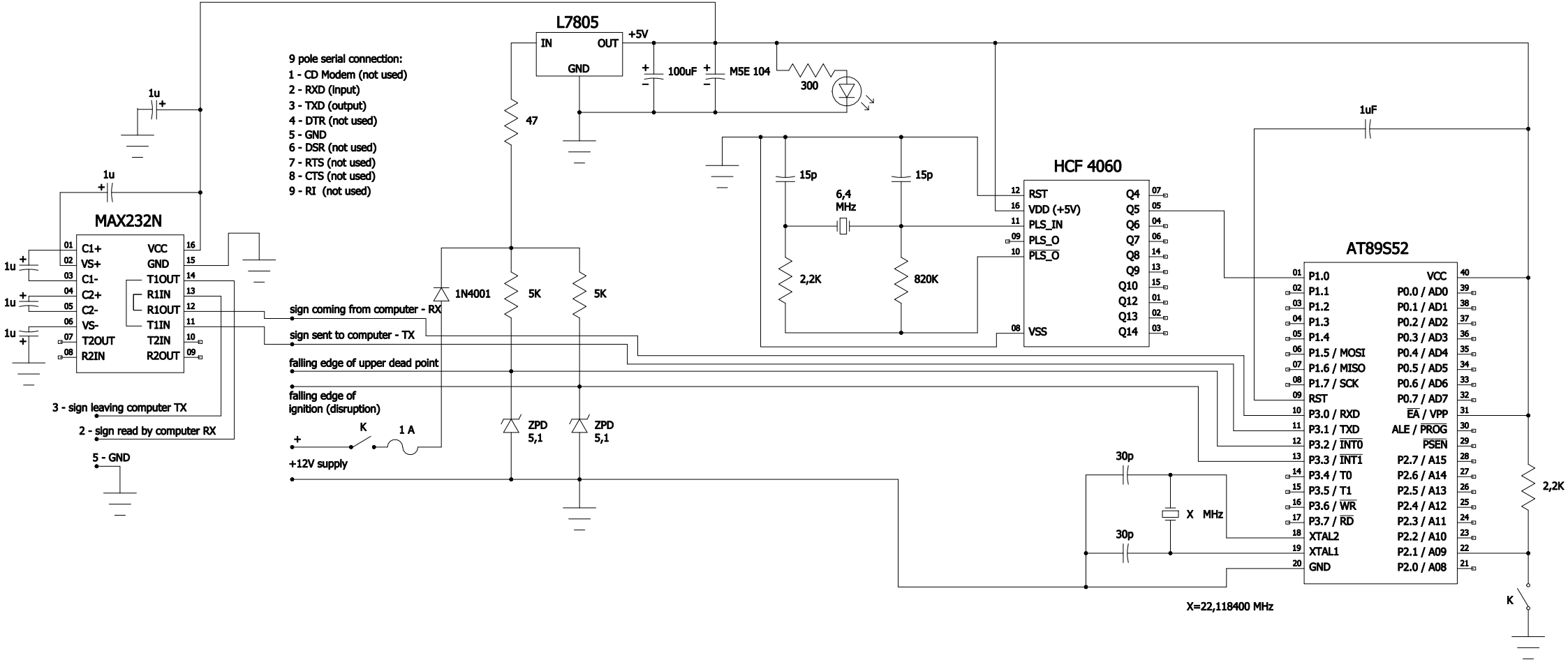
L7805
IN
OUT
GND
+5V
100uF
M5E 104
300
9 pole serial connection:
1 - CD Modem (not used)
2 - RXD (input)
3 - TXD (output)
4 - DTR (not used)
5 - GND
6 - DSR (not used)
7 - RTS (not used)
8 - CTS (not used)
9 - RI (not used)
1u
1u
MAX232N
C1+
VS+
C1-
C2+
C2-
VS-
T2OUT
R2IN
VCC
GND
T1OUT
R1IN
R1OUT
T1IN
T2IN
R2OUT
1u
1u
1u
3 - sign leaving computer TX
2 - sign read by computer RX
5 - GND
47
1N4001
5K
5K
sign coming from computer - RX
sign sent to computer - TX
falling edge of upper dead point
falling edge of
ignition (disruption)
K
1 A
+12V supply
ZPD
5,1
ZPD
5,1
15p
15p
6,4
MHz
2,2K
820K
HCF 4060
RST
VDD (+5V)
PLS_IN
PLS_O
PLS_O
VSS
Q4
Q5
Q6
Q7
Q8
Q9
Q10
Q12
Q13
Q14
1uF
AT89S52
P1.0
P1.1
P1.2
P1.3
P1.4
P1.5 / MOSI
P1.6 / MISO
P1.7 / SCK
RST
P3.0 / RXD
P3.1 / TXD
P3.2 / INT0
P3.3 / INT1
P3.4 / T0
P3.5 / T1
P3.6 / WR
P3.7 / RD
XTAL2
XTAL1
GND
VCC
P0.0 / AD0
P0.1 / AD1
P0.2 / AD2
P0.3 / AD3
P0.4 / AD4
P0.5 / AD5
P0.6 / AD6
P0.7 / AD7
EA / VPP
ALE / PROG
PSEN
P2.7 / A15
P2.6 / A14
P2.5 / A13
P2.4 / A12
P2.3 / A11
P2.2 / A10
P2.1 / A09
P2.0 / A08
30p
30p
X MHz
X=22,118400 MHz
2,2K
K

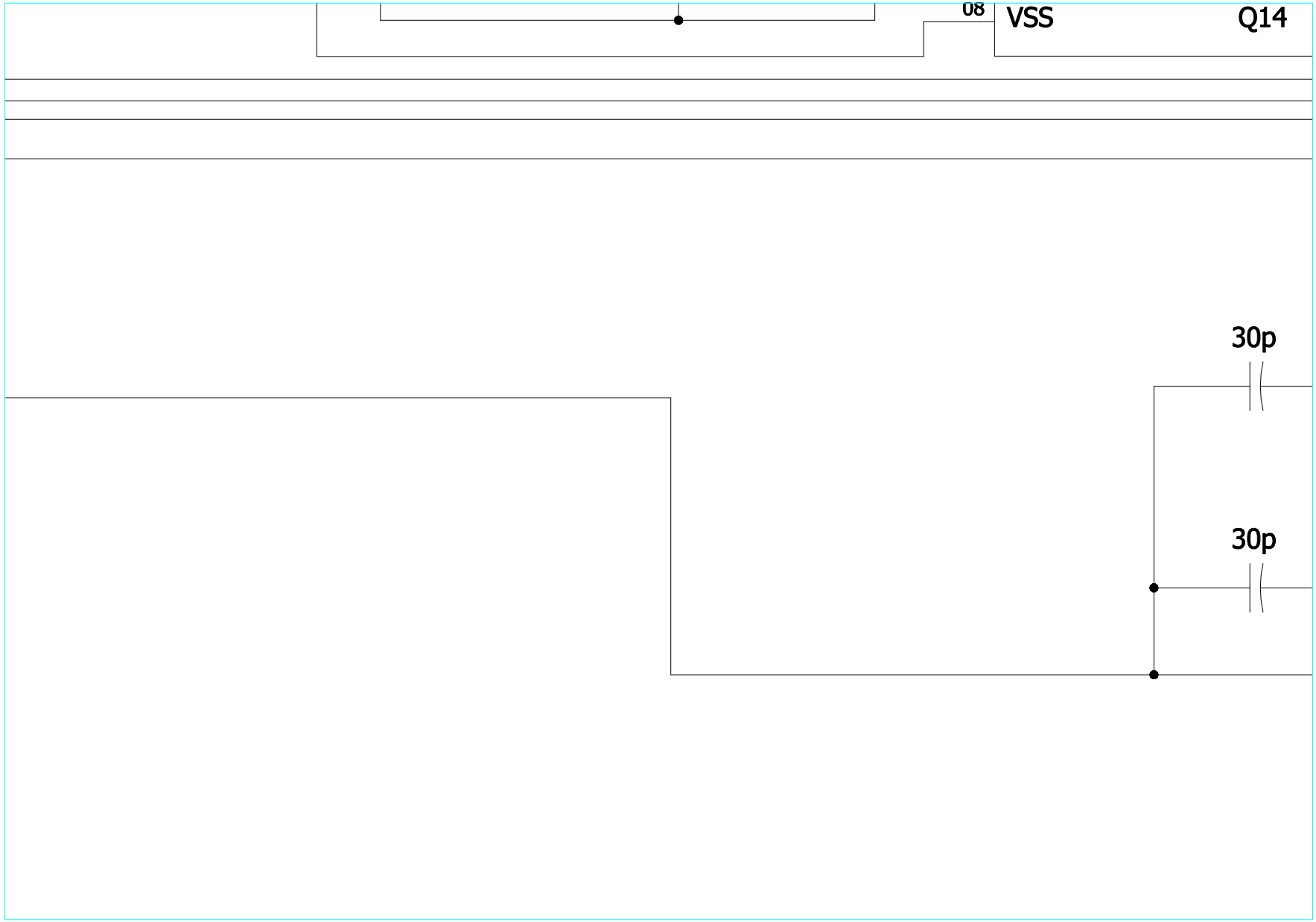
08
VSS
Q14
30p
30p

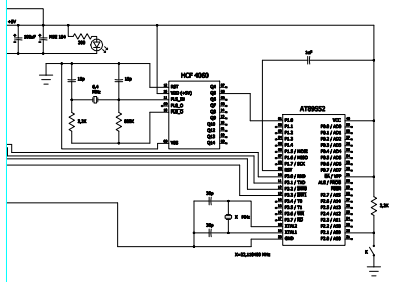
+5V
100uF
100 1W
300
HCF 4060
10p
10p
6.4
MHz
1.5K
100K
RST
TEST (CTC)
RCLEN
RALD
RSLD
GND
VDD
Q4
Q5
Q6
Q7
Q8
Q9
Q10
Q12
Q13
Q14
Q15
1uF
AT89S52
P1.0
P1.1
P1.2
P1.3
P1.4
P1.5 / MOSI
P1.6 / MISO
P1.7 / SCK
RST
P3.0 / RXD
P3.1 / TXD
P3.2 / INT0
P3.3 / INT1
P3.4 / T0
P3.5 / T1
P3.6 / WR
P3.7 / RD
XTAL2
XTAL1
GND
VCC
P0.0 / AD0
P0.1 / AD1
P0.2 / AD2
P0.3 / AD3
P0.4 / AD4
P0.5 / AD5
P0.6 / AD6
P0.7 / AD7
EA / VPP
ALE / PROG
PSEN
P2.7 / A15
P2.6 / A14
P2.5 / A13
P2.4 / A12
P2.3 / A11
P2.2 / A10
P2.1 / A9
P2.0 / A8
30p
30p
X = 32.0000 MHz
1.5K