Mostek 20-9-06
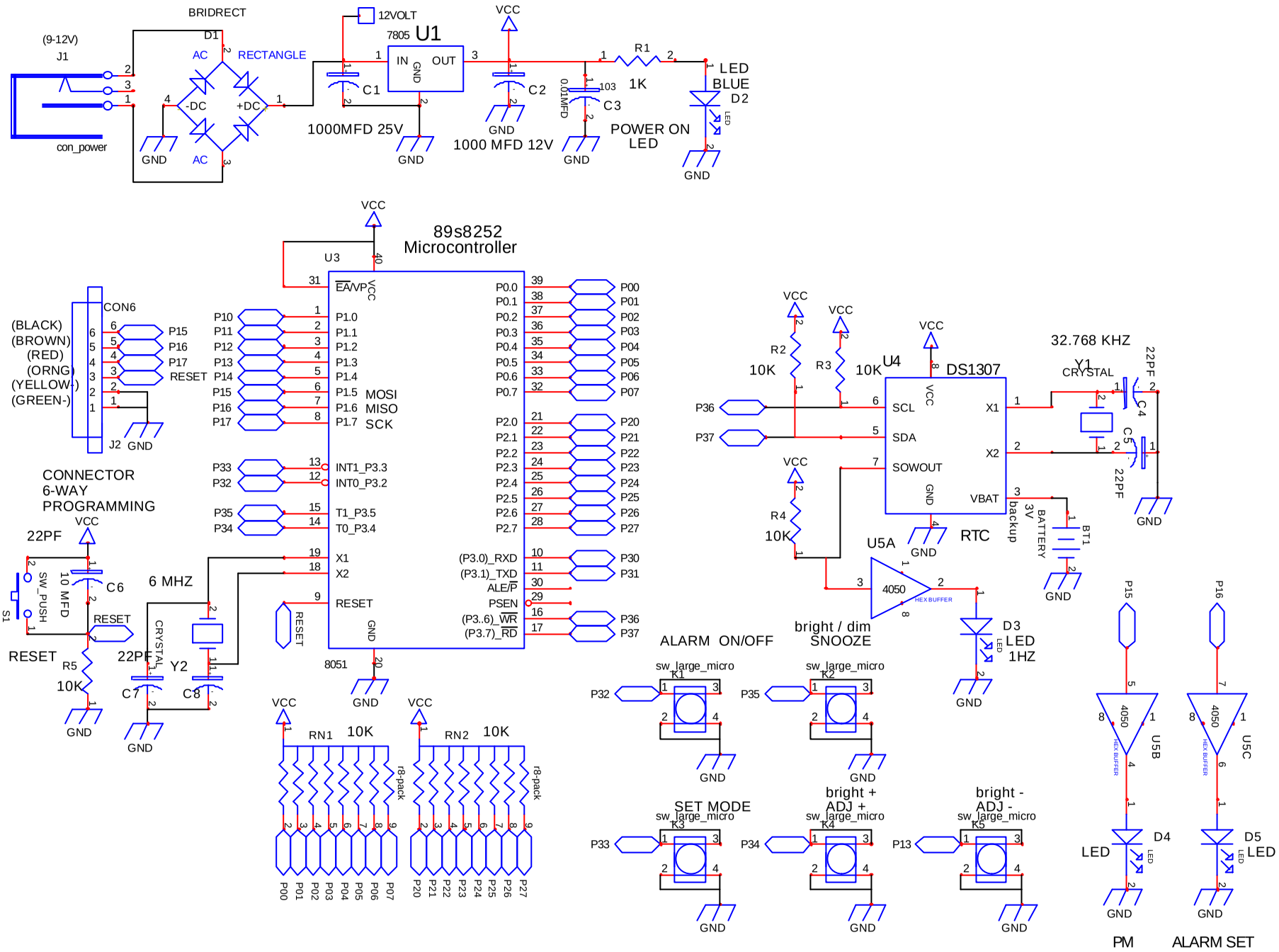
SCHEMATIC
CLOCK - 7219-8051-ALARM